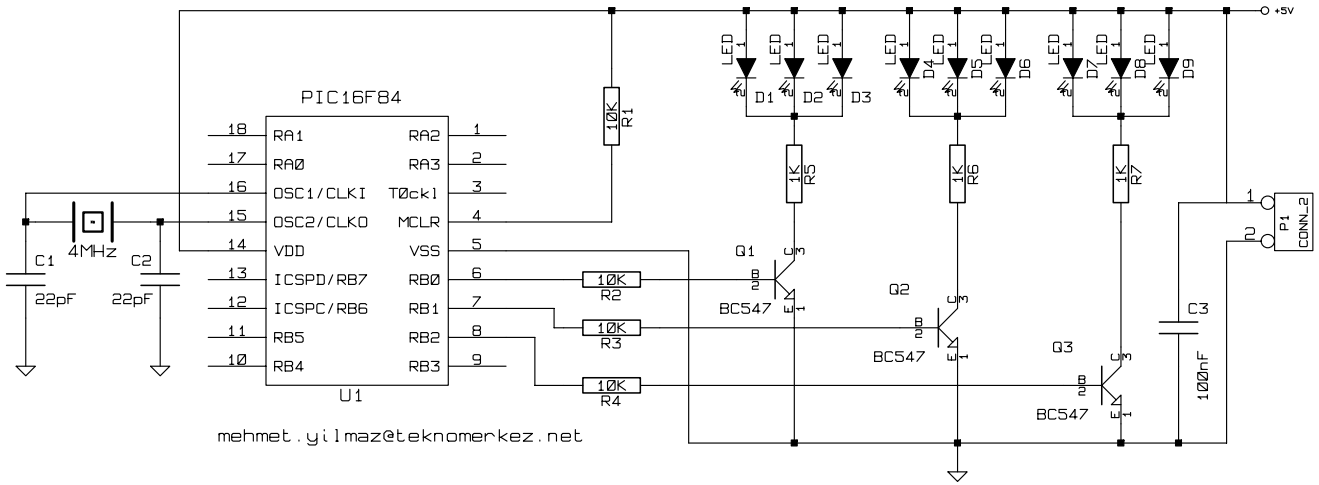
PIC16F84
U1
RA1
RA0
OSC1/CLKI
OSC2/CLKO
VDD
ICSPD/RB7
ICSPC/RB6
RB5
RB4
RA2
RA3
T0ckl
MCLR
VSS
RB0
RB1
RB2
RB3
4MHz
C1
22pF
C2
22pF
10K
R1
10K
R2
10K
R3
10K
R4
1K
R5
1K
R6
1K
R7
Q1
BC547
Q2
BC547
Q3
BC547
LED
D1
D2
D3
D4
D5
D6
D7
D8
D9
+5V
P1
CONN_2
C3
100nF
mehmet.yilmaz@teknomerkez.net